MITSUBISHI ELECTRIC
Changes for the Better

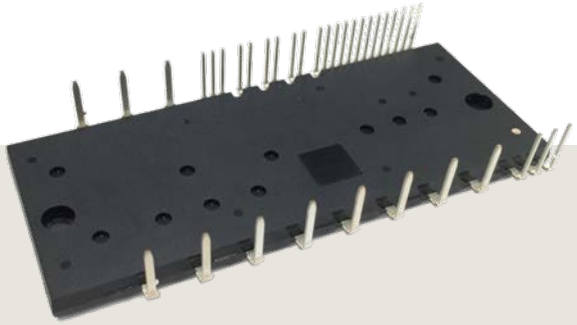

„All-In-One“ DIPIPM+™ Series for Compact Inverter Designs

Mitsubishi Electric has developed a novel family of compact Intelligent Converter-Inverter-Brake modules. This new DIPIPM+™ series incorporates optimized IGBT- and FWDi-chips, low voltage and high voltage driver ICs in a compact transfer molded dual-inline package. The new DIPIPM+™ series provides smart answers to the two key questions a designer faces when developing a new inverter: How to reduce the system cost? How to reduce the inverter size using compact design?

Product Advantages

- Compact design with integrated Converter, Inverter and Brake
- Integrated HVIC & LVIC
- Dedicated protection functions: short circuit and under voltage
  Operation at $T_{C,Max}$ = 110°C
- High Isolation Voltage
  V_{iso} = 2500V_{rms}
- Same Package size
  for 6 different power ratings

User Benefits	Achieved by	
Inverter Cost Reduction	Manufacturing Cost	- Easy assembly: only one power module to be soldered to the PCB - Reduced assembly cost by lower part count
	Development Cost	- Easy test setup with the DIPIPM+™ Evaluation Board - Reduced engineering efforts & shorter dev. Time
	Material Cost	- Reduced PCB-cost - Reduced EMI filter cost - No AC-output current sensors needed
Inverter Size Reduction	- Reduced heat sink size - Reduced EMI Filter size - Very compact PCB design	
Increasing Inverter Performance	- Increased robustness to endure harsh environmental conditions - Accurate analog temperature-output VOT for adaptive inverter control	

Circuit	Circuit Diagram	Package Size	Product Name	600V	1200V
Converter + 7in1	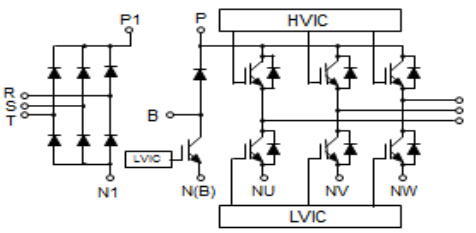	85 mm X 34 mm	PSS05MC1FT		5A
			PSS10MC1FT		10A
			PSS15MC1FT		15A
			PSS25MC1FT		25A
			PSS35MC1FT		35A
			PSS50MC1F6	50A	
Converter + 6in1	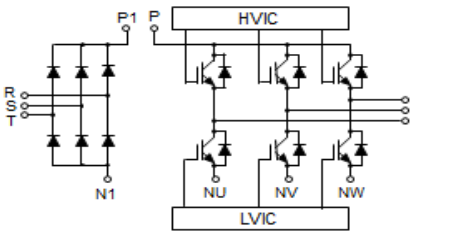	85 mm X 34 mm	PSS05NC1FT		5A
			PSS10NC1FT		10A
			PSS15NC1FT		15A
			PSS25NC1FT		25A
			PSS35NC1FT		35A
			PSS50NC1F6	50A	

MITSUBISHI ELECTRIC
Changes for the Better

Cost Reduction

When developing a new general purpose inverter, optimizing the system costs is an important necessity. Basically three cost factors must be considered:
Development cost, material cost and manufacturing cost.
All three factors are addressed by the new DIPIPM+™ series.

- Availability of a plug-and-play Evaluation board
- Integrated functionalities
- Reduced part count on the PCB-Board

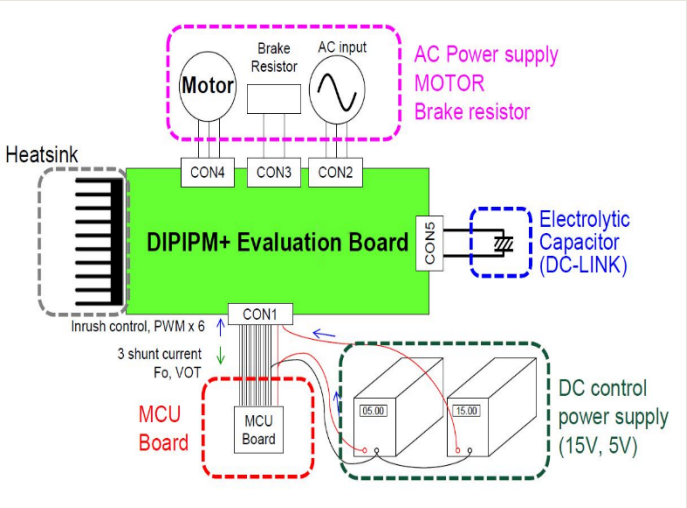

Size Reduction

Inverter compactness is an important objective when establishing a new inverter design since power density (kVA/dm³) is a key benchmarking criteria for comparing general purpose inverters. DIPIPM+™ offers the following advantages for increasing the inverter power density:

- Using the bootstrap-technology for control power supply
- Substituting the inverter output current sensors by emitter shunts
- Converter, Inverter and Brake in the same module package
- Reducing the EMI-filter size
- Very compact PCB design
- Reducing the heat sink size

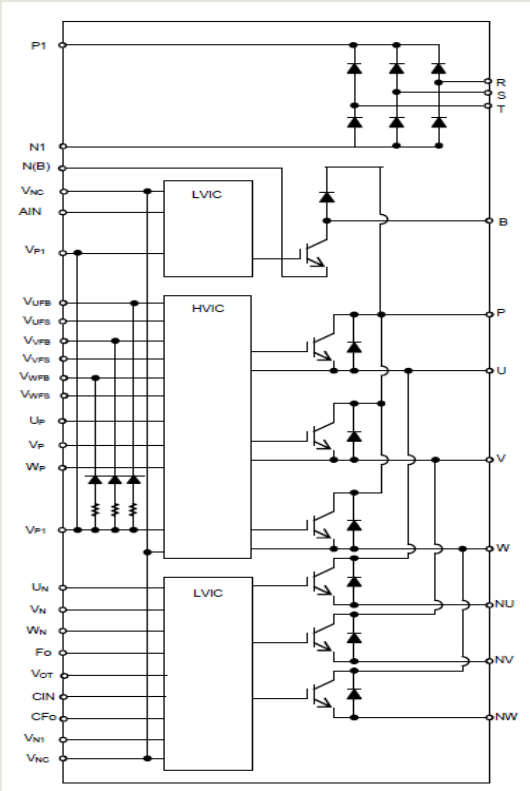

Increased Inverter Performance

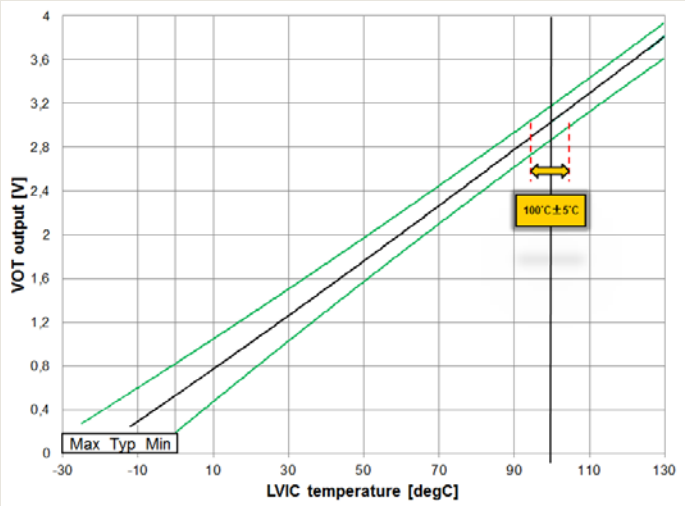

The analog Voltage-Over-Temperature signal (VOT) of DIPIPM+™ can be used to enhance the robustness of the inverter against harsh environmental conditions. Usually the inverter specification is provided at maximum ambient temperature of Ta=+40°C. For higher ambient temperatures an inverter de-rating has to be considered when installing the drive. By using the accurate VOT-signal of DIPIPM+™ an adaptive inverter de-rating can be activated during operation for avoiding an OT-trip of the drive.

Mitsubishi Electric Europe B.V. (European Headquarters)
– Semiconductor European Business Group –
Mitsubishi-Electric-Platz 1 / D-40882 Ratingen
Phone +49 (0) 2102 486 0
Fax +49 (0) 2102 486 7220
www.MitsubishiElectric.com
www.meu-semiconductor.eu

May 2019